ГОСУДАРСТВЕННЫЙ СТАНДАРТ
СОЮЗА ССР

СКОБЫ ЯКОРНЫЕ

ТЕХНИЧЕСКИЕ УСЛОВИЯ

ГОСТ 765–85

Постановлением [illegible]

ИПК Издательство стандартов
Москва

СКОБЫ ЯКОРНЫЕ

Технические условия

ГОСТ [illegible]
[illegible]

Взамен ГОСТ [illegible]

[illegible]

1. ОСНОВНЫЕ РАЗМЕРЫ

[illegible]

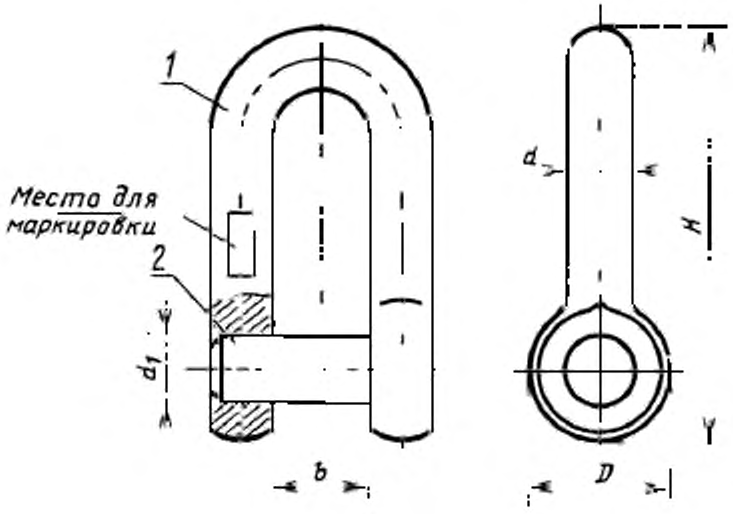

[illegible]

[illegible]

Инв. № [illegible]

2. ТЕХНИЧЕСКИЕ ТРЕБОВАНИЯ

[illegible]

[illegible]

Harmonické [illegible] Hist. No. [illegible]

[illegible] Hist. No. [illegible]

[illegible]

Harmonické [illegible] Hist. No. [illegible]

[illegible]

Harmonické [illegible] Hist. No. [illegible]

J. KOVÁŘÍKOVÁ

[illegible]

J. PŘÍBRAMSKÁ

[illegible]

[illegible]

Hesonnat o [illegible] Hist. № 21.

[illegible]

Hesonnat o [illegible] Hist. № 21.

[illegible]

5. MEIOTHESOHEPOCH

[illegible]

6. МАРКИРОВКА, УПАКОВКА, ПРАВИЛО ПОГРУЗКИ И ХРАНЕНИЕ

[illegible]

(Измененная редакция, Изм. № 3).

[illegible]

(Измененная редакция, Изм. № 2).

7. УКАЗАНИЯ ПО ЭКСПЛУАТАЦИИ

[illegible]

[illegible]

Примечание к таблице [illegible]

8. [illegible]

[illegible]

[illegible]

[illegible]	[illegible]	[illegible]	[illegible]
[illegible]	[illegible]	[illegible]	[illegible]
[illegible]	[illegible]	[illegible]	[illegible]
[illegible]	[illegible]	[illegible]	[illegible]
[illegible]	[illegible]	[illegible]	[illegible]
[illegible]	[illegible]	[illegible]	[illegible]
[illegible]	[illegible]	[illegible]	[illegible]
[illegible]	[illegible]	[illegible]	[illegible]
[illegible]	[illegible]	[illegible]	[illegible]
[illegible]	[illegible]	[illegible]	[illegible]
[illegible]	[illegible]	[illegible]	[illegible]
[illegible]	[illegible]	[illegible]	[illegible]
[illegible]	[illegible]	[illegible]	[illegible]
[illegible]	[illegible]	[illegible]	[illegible]
[illegible]	[illegible]	[illegible]	[illegible]
[illegible]	[illegible]	[illegible]	[illegible]
[illegible]	[illegible]	[illegible]	[illegible]

ГОСТ [illegible]—85

ИНФОРМАЦИОННЫЕ ДАННЫЕ

1. РАЗРАБОТАН

[illegible] В.А. Бесчасный

2. УТВЕРЖДЕН И ВВЕДЕН В ДЕЙСТВИЕ Постановлением Государственного комитета СССР по стандартам от 26.02.85 № 381

3. ВЗАМЕН ГОСТ [illegible]—[illegible]

4. Срок первой проверки — 1995 г.
периодичность проверки — 5 лет

5. ССЫЛОЧНЫЕ НОРМАТИВНО-ТЕХНИЧЕСКИЕ ДОКУМЕНТЫ

[illegible]	[illegible]
[illegible]	[illegible]
[illegible]	[illegible]
[illegible]	[illegible]
[illegible]	[illegible]
[illegible]	[illegible]
[illegible]	[illegible]
[illegible]	[illegible]
[illegible]	[illegible]
[illegible]	[illegible]
[illegible]	[illegible]
[illegible]	[illegible]
[illegible]	[illegible]
[illegible]	[illegible]
[illegible]	[illegible]
[illegible]	[illegible]
[illegible]	[illegible]
[illegible]	[illegible]
[illegible]	[illegible]

6. Ограничение срока действия снято по Протоколу № 7—95 Межгосударственного Совета по стандартизации, метрологии и сертификации (ИУС 11—95)

7. ИЗДАНИЕ (декабрь 1995 г.) с Изменениями № 1, 2, утвержденными в феврале 1985 г. и марте 1990 г. (ИУС 5—85, 7—90)